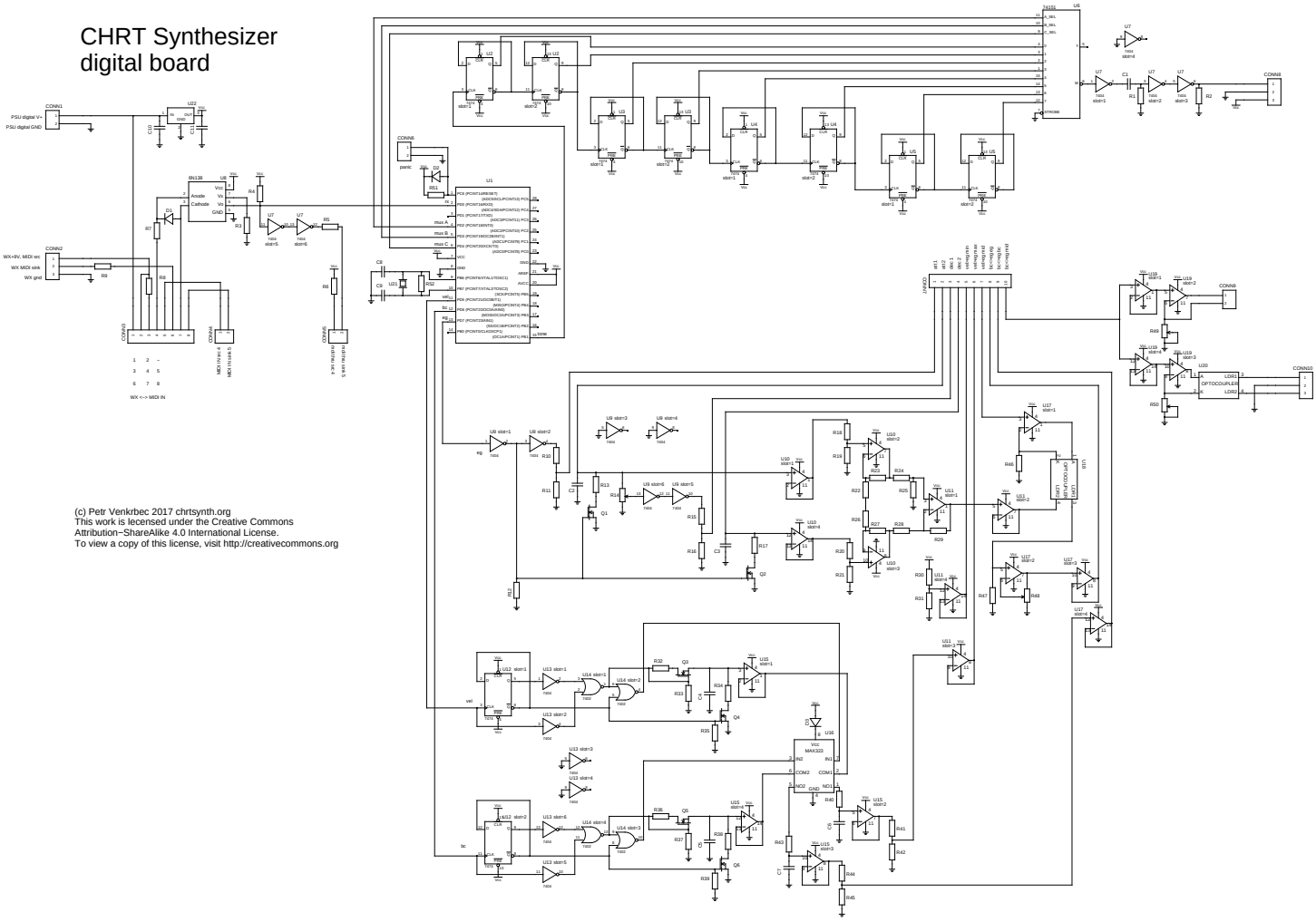CHRT Synthesizer digital board